SHARP®

OVER THE RANGE MICROWAVE OVEN OPERATION MANUAL

MODEL

SM01652DS

CONTENTS

- For Customer Assistance 2
- Precautions to Avoid Possible Exposure to Excessive Microwave Energy 3
- Consumer Limited Warranty 4
- Important Safety Instructions 5
- Federal Communication Commission Radio Frequency Interference Statement 6
- Grounding Instructions 6
- Installation Guide 7-8
- Specifications 9
- Features Diagram 10-12
- Operation Procedure 13
- Controls 14-27
- Care and Cleaning 28-31
- Before You Call 32
- Questions and Answers 33
- Cooking Instructions 34-44

READ ALL INSTRUCTIONS CAREFULLY BEFORE USING THE OVEN.

※ Keep the waveguide cover clean at all times.
Wipe the oven interior with a soft damp cloth after each use.
If you leave grease or fat anywhere in the cavity it may overheat, smoke or even catch fire when next using the oven.

Carousel®

FOR CUSTOMER ASSISTANCE

REGISTER YOUR PRODUCT

Registering your new product is easy and offers benefits that help you get the most out of your Sharp product including:

- ✓ **Convenience**: If you ever need warranty support, your product information is already on file.
- ✓ **Communication**: Stay up to date with important notifications and special offers from SHARP.
- ✓ **Support**: Quickly access support content including Owners Manuals, FAQ's, How-to Videos, and much more.

3 EASY WAYS TO REGISTER TODAY!

SCAN
Use the camera or QR code scanning application on your smart phone

Scan this QR Code on your smart phone

ONLINE
Visit our sites to learn more about your product at sharpusa.com and sbl.sharpusa.com

Visit http://www.sharpusa.com/register

CALL US
US **800-BE-SHARP**
800-237-4277
Mon-Fri: 7am-7pm CST
Sat-Sun: 9am-7pm CST

Contact a Sharp Advisor on the phone

PRODUCT SUPPORT

If you have questions about the setup or operation of your product, please refer to the corresponding section within this manual.

Additionally, visit www.sharpusa.com/support to access exclusive content about your product including:

→ FAQ's and How-To Videos
→ Find or Request Service
→ Purchase an Extended Warranty
→ Downloads including the Installation Guide, Spec Sheet, and Owner's Manual

CONTACT US

If at any time you have questions or comments concerning your SHARP product, please contact the SHARP Customer Assistance Center. We are available to assist you through multiple contact methods for your convenience:

EMAIL
Available 24/7
US: sharpusa.com

See the Contact Us section on our sites

CHAT ONLINE
Mon-Fri: 7am-7pm CST
Sat-Sun: 9am-7pm CST

U.S. | www.sharpusa.com/support

CALL US
US **800-BE-SHARP**
800-237-4277
Mon-Fri: 7am-7pm CST
Sat-Sun: 9am-7pm CST

Contact a Sharp Advisor on the phone

PRECAUTIONS TO AVOID POSSIBLE EXPOSURE TO EXCESSIVE MICROWAVE ENERGY

(a) Do not attempt to operate this oven with the door open since open-door operation can result in harmful exposure to microwave energy. It is important not to defeat or tamper with the safety interlocks.

(b) Do not place any object between the oven front face and the door or allow soil or cleaner residue to accumulate on sealing surfaces.

(c) Do not operate the oven if it is damaged. It is particularly important that the oven door close properly and that there is no damage to the: (1) door (bent), (2) hinges and latches (broken or loosened), (3) door seals and sealing surfaces.

(d) The oven should not be adjusted or repaired by anyone except properly qualified service personnel.

CONSUMER LIMITED WARRANTY

SHARP ELECTRONICS CORPORATION warrants to the first consumer purchaser that this Sharp brand product (the "Product"), when shipped in its original container, will be free from defective workmanship and materials, and agrees that it will, at its option, either repair the defect or replace the defective Product or part thereof with a new or remanufactured equivalent at no charge to the purchaser for parts or labor for the period(s) set forth below.

This warranty does not apply to any appearance items of the Product nor to the additional excluded item(s) set forth below nor to any Product the exterior of which has been damaged or defaced, which has been subjected to improper voltage or other misuse, abnormal service or handling, or which has been altered or modified in design or construction.

In order to enforce the rights under this limited warranty, the purchaser should follow the steps set forth below and provide proof of purchase to the servicer.

The limited warranty described herein is in addition to whatever implied warranties may be granted to purchasers by law. ALL IMPLIED WARRANTIES INCLUDING THE WARRANTIES OF MERCHANTABILITY AND FITNESS FOR USE ARE LIMITED TO THE PERIOD(S) FROM THE DATE OF PURCHASE SET FORTH BELOW. Some states do not allow limitations on how long an implied warranty lasts, so the above limitation may not apply to you.

Neither the sales personnel of the seller nor any other person is authorized to make any warranties other than those described herein, or to extend the duration of any warranties beyond the time period described herein on behalf of Sharp.

The warranties described herein shall be the sole and exclusive warranties granted by Sharp and shall be the sole and exclusive remedy available to the purchaser. Correction of defects, in the manner and for the period of time described herein, shall constitute complete fulfillment of all liabilities and responsibilities of Sharp to the purchaser with respect to the Product, and shall constitute full satisfaction of all claims, whether based on contract, negligence, strict liability or otherwise. In no event shall Sharp be liable, or in any way responsible, for any damages or defects in the Product which were caused by repairs or attempted repairs performed by anyone other than an authorized servicer. Nor shall Sharp be liable or in any way responsible for any incidental or consequential economic or property damage. Some states do not allow the exclusion of incidental or consequential damages, so the above exclusion may not apply to you.

THIS LIMITED WARRANTY IS VALID ONLY IN THE FIFTY (50) UNITED STATES, THE DISTRICT OF COLUMBIA AND PUERTO RICO.

Your Product Model Number & Description:	SMO1652DS Home Use Carousel Microwave Oven. (Be sure to have this information available when you need service for your Product.)
Warranty Period for this Product:	One (1) year parts and labor. The warranty period continues for an additional six (6) years, for a total of seven (7) years, with respect to the magnetron tube in the Product for parts only; labor and service are not provided free of charge for this additional period.
Additional Item(s) Excluded from Warranty Coverage (if any):	Non-functional accessories, turntable and light bulb.
Where to Obtain Service:	From a Sharp Authorized Servicer located In the United States. Be sure to have Proof of Purchase available. For in-home service, the servicer will come to the unit's location. If it is necessary to remove the unit for repair, the servicer will reinstall the unit at no extra charge, provided it was installed according to Sharp's Installation Instructions. To find the location of the nearest Sharp Authorized Servicer, call Sharp toll free at 1-800-BE-SHARP (1-800-237-4277).

TO OBTAIN SUPPLY, ACCESSORY OR PRODUCT INFORMATION, CALL 1-800-BE-SHARP OR VISIT www.sharpusa.com.
SAVE THE PROOF OF PURCHASE AS IT IS NEEDED SHOULD YOUR OVEN EVER REQUIRE WARRANTY SERVICE.

IMPORTANT SAFETY INSTRUCTIONS

When using electrical appliances, basic safety precautions should be followed, including the following:

WARNING-To reduce the risk of burns, electric shock, fire, injury to persons or exposure to excessive microwave energy:

1. Read all instructions before using the appliance.
2. Read and follow the specific "PRECAUTIONS TO AVOID POSSIBLE EXPOSURE TO EXCESSIVE MICROWAVE ENERGY" found on page 3.
3. This appliance must be grounded. Connect only to properly grounded outlet. See "GROUNDING INSTRUCTIONS" found on page 6.
4. Install or locate this appliance only in accordance with the provided installation instructions.
5. Some products such as whole eggs and sealed containers - for example, closed glass jars are able to explode and should not be heated in this oven.
6. Use this appliance only for its intended use as described in this manual. Do not use corrosive chemicals or vapors in this appliance. This type of oven is specifically designed to heat, cook, or dry food. It is not designed for industrial or laboratory use.
7. As with any appliance, close supervision is necessary when used by children.
8. Do not operate this appliance if it has a damaged cord or plug, if it is not working properly, or if it has been damaged or dropped.
9. This appliance should be serviced only by qualified service personnel.

   Contact nearest authorized service facility for examination, repair or adjustment.
10. Do not cover or block any openings on the appliance.
11. Do not store this appliance outdoors. Do not use this product near water — for example, near a kitchen sink, in a wet basement, near a swimming pool, or similar locations.
12. Do not immerse cord or plug in water.
13. Keep cord away from heated surfaces.
14. Do not let cord hang over edge of table or counter.
15. When cleaning surfaces of door and oven that comes together on closing the door, use only mild, non-abrasive soaps or detergents applied with a sponge or soft cloth.
16. To reduce the risk of fire in the oven cavity:
    a) Do not overcook food. Carefully attend appliance when paper, plastic, or other combustible materials are placed inside the oven to facilitate cooking.
    b) Remove wire twist-ties from paper or plastic bags before placing bag in oven.
    c) If materials inside the oven ignite, keep oven door closed, turn oven off, and disconnect the power cord, or shut off power at the fuse or circuit breaker panel.
    d) Do not use the cavity for storage purposes. Do not leave paper products, cooking utensils, or food in the cavity when not in use.
17. Liquids, such as water, coffee, or tea are able to be overheated beyond the boiling point without appearing to be boiling due to surface tension of the liquid. Visible bubbling or boiling when the container is removed from the microwave oven is not always present. THIS COULD RESULT IN VERY HOT LIQUIDS SUDDENLY BOILING OVER WHEN A SPOON OR OTHER UTENSIL IS INSERTED INTO THE LIQUID.

    To reduce the risk of injury to persons:
    a) Do not overheat the liquid.
    b) Stir the liquid both before and halfway through heating it.
    c) Do not use straight-sided containers with narrow necks.
    d) After heating, allow the container to stand in the microwave oven for a short time before removing the container.
    e) Use extreme care when inserting a spoon or other utensil into the container.
18. Do not use this microwave oven to heat corrosive chemicals (for example, sulfides and chlorides). Vapors from such corrosive chemicals may interact with the contact and springs of the safety interlock switches thereby rendering them inoperable.
19. Never heat oil or fat for deep frying as you cannot control the temperature and doing so may lead to overheating and fire.
20. Do not operate the oven without the glass tray in place. Be sure it is properly sitting on the rotating base.
21. Use care when cleaning the vent hood filters.
    Corrosive cleaning agents such as lye-based oven cleaners may damage the filters.
22. Clean the ventilating hood frequently. Do not allow grease to accumulate on the hood or the filters.
23. Suitable for use above both gas and electric cooking equipment up to 30 inches wide.
24. Do not use this oven for commercial purposes It is designed for household use only.
25. When flaming foods under the hood, turn the fan on. Keep the area under the hood properly ventilated at all times. Turn off cooking equipment if you see flames or a fire occurs.

SAVE THESE INSTRUCTIONS

FEDERAL COMMUNICATIONS COMMISSION RADIO FREQUENCY INTERFERENCE STATEMENT

WARNING:
This equipment generates and uses ISM frequency energy and if not installed and used properly, that is in strict accordance with the manufacturer's instructions, may cause interference to radio and television reception.
It has been type-tested and found to comply with limits for an ISM Equipment pursuant to part 18 of FCC Rules, which are designed to provide reasonable protection against such interference in a residential installation.
However, there is no guarantee that interference will not occur in a particular installation.
If this equipment does cause interference to radio or television reception, which can be determined by turning the equipment off and on, the user is encouraged to try to correct the interference by one or more of the followings.

- Reorient the receiving antenna of radio or television.
- Relocate the Microwave oven with respect to the receiver.
- Move the microwave oven away from the receiver.
- Plug the microwave oven into a different outlet so that microwave oven and receiver are on different branch circuits.

THE MANUFACTURER is not responsible for any radio or TV interference caused by UNAUTHORIZED MODIFICATION to this microwave oven. It is the responsibility of the user to correct such interference.

GROUNDING INSTRUCTIONS

This appliance must be grounded. In the event of an electrical short circuit, the grounding plug reduces the risk of electric shock by providing an escape wire for electric current. This appliance is equipped with a cord having a grounding wire with a grounding plug. The plug must be plugged into an outlet that is properly installed and grounded.

WARNING:

Improper use of the grounding can result in a risk of electric shock.
Consult a qualified electrician or serviceman if the grounding instructions are not completely understood, or if doubt exists as to whether the appliance is properly grounded, and either

1) If it is necessary to use an extension cord, use only a 3-wire extension cord that has a 3-blade grounding plug, and a 3-slot receptacle that will accept the plug on the appliance. The marked rating of the extension cord shall be equal to or greater than the electrical rating of the appliance, or
2) Do not use an extension cord. If the power supply cord is too short, have a qualified electrician or serviceman install an outlet near the appliance.

WARNING:

Do not cut or remove the third (ground) prong from the power cord under any circumstances.

INSTALLATION GUIDE

1. Examine the oven after unpacking.

Unpack the oven, remove all packaging material and examine the oven for any damage such as dents on the interior or exterior of the oven, broken door latches, cracks in the door, or a door that is not lined up correctly. If there is any damage, do not operate the oven and notify your dealer immediately.

2. Checking the parts

Carefully unpack your microwave oven, and make sure you've received all the parts shown below. If your microwave oven was damaged during shipping, or if you do not have all the parts, contact the SHARP Call Center.

Image	Part & Description	Q'ty	Image	Part & Description	Q'ty
	Hardware Kit (Screws)	1	Installation Manual	Installation Manual	1
	Metal Rack	1	Operation Manual	Operation Manual	1
	Damper (Exhaust Adapter)	1		Guide Roller Ring	1
	Mounting Plate	1		Grease Filters	2
Top Cabinet Template	Top Cabinet Template	1		Grease Filter Holders	2
Wall Template	Rear Wall Template	1		Glass Turn Table	1

3. Location

- The installation of this appliance must be performed by a qualified technician or service company.
  Failing to have a qualified technician install the oven may result in electric shock, fire, an explosion, problems with the product, or injury.
- Do not install this appliance in a humid, oily, or dusty location, or in a location exposed to direct sunlight or water (rain drops).
- Plug the power plug into the wall socket firmly. Do not use a damaged power plug, damaged power cord, or loose wall socket.
- Do not mount over a sink.
- Do not stand on top of the microwave or place objects (such as laundry, oven covers, lighted candles, lighted cigarettes, dishes, chemicals, metal objects, etc.) on the appliance.
  This may result in electric shock, fire, problems with the product, or injury.

4. Power supply.

- Check your local power source.
  This microwave oven requires a current of approximately 14 amperes, 120Volts, 60Hz and a grounded outlet.

a) A short power-supply cord is provided to reduce the risks of the user becoming entangled in or tripping over a longer cord.

b) Longer cord sets or extension cords are available and may be used if care is exercised in their use.

c) If a long cord or extension cord is used:

- The marked electrical rating of the cord set or extension cord should be at least as great as the electrical rating of the oven.
- The extension cord must be a grounding type 3-wire cord.
- The longer cord should be arranged so that it will not drape the table top or counter where it can be pulled on by children or tripped over unintentionally.

- Check power cord and outlet
  - Remove all foreign substances such as dust or water from the power plug terminals and contact points using a dry cloth on a regular basis.
  - Unplug the power plug and clean it with a dry cloth.
  - Plug the power cord into a properly grounded 3 pronged outlet. Your oven should be the only appliance connected to this circuit.
  - Sharing a wall socket with other appliances, using a power strip, or extending the power cord may result in electric shock or fire.
  - Do not use an electric transformer. It may result in electric shock or fire.
  - Ensure that the voltage, frequency and current provided match the product's specifications.

When use 3-pronged plug

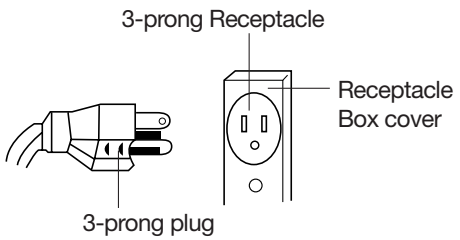

When use grounding adaptor, make sure the receptacle box is fully grounded.

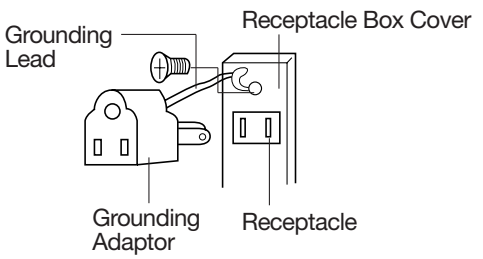

"THE CANADIAN ELECTRICAL CODE DOES NOT ALLOW THE USE OF THE GROUNDING ADAPTOR"

5. Critical usage WARNINGS

If the microwave appliance is flooded, please contact your nearest service center. Failing to do so may result in electric shock or fire.

Read and follow the specific "Precautions to Avoid Possible Exposure to Excessive Microwave Energy" found on Page 3.

If the microwave generates a strange noise, a burning smell or smoke, unplug it immediately and contact your nearest service center.

- In the event of a gas leak (propane gas, LP gas, etc.), ventilate the room immediately. Do not touch the microwave, power cord, or plug.
- Do not use a ventilating fan.
- A spark may result in an explosion or fire.
  Take care that the door or any of the other parts do not come into contact with your body while cooking or just after cooking.
- In the event of a grease fire on the surface units below the oven, smother the flaming pan on the surface unit by covering the pan completely with a lid, a cookie sheet or a flat tray.
  Never leave surface units beneath your oven unattended at high heat settings. Boil overs cause smoking and greasy spills that may ignite and spread if the vent fan is operating. To minimize automatic fan operation, use adequate sized cookware. Use high heat on surface units only when necessary.
  If materials inside the oven should ignite, keep the oven door closed, turn the oven off and disconnect the power cord, or shut off power at the fuse or circuit breaker panel. If the door is opened, the fire may spread.
- Always observe Safety Precautions when using your oven. Never try to repair the oven on your own. There is dangerous voltage inside. If the oven needs to be repaired, contact an authorized service center near you.

SPECIFICATIONS

POWER SUPPLY		120V AC, 60Hz SINGLE PHASE WITH GROUNDING
MICROWAVE	INPUT POWER	1600 W
	ENERGY OUTPUT	1000 W
	FREQUENCY	2,450MHz
OUTSIDE DIMENSIONS (W x H x D)		29.9 x 16.3 x 15.9 in
CAVITY DIMENSIONS (W x H x D)		19.8 x 10.0 x 14.9 in
CAVITY VOLUME		1.6 cu.ft
NET WEIGHT		APPROX. 50.5 lbs
TIMER		99 min. 99 sec.
POWER SELECTIONS		10 Levels

** Specifications are subject to change without notice.*

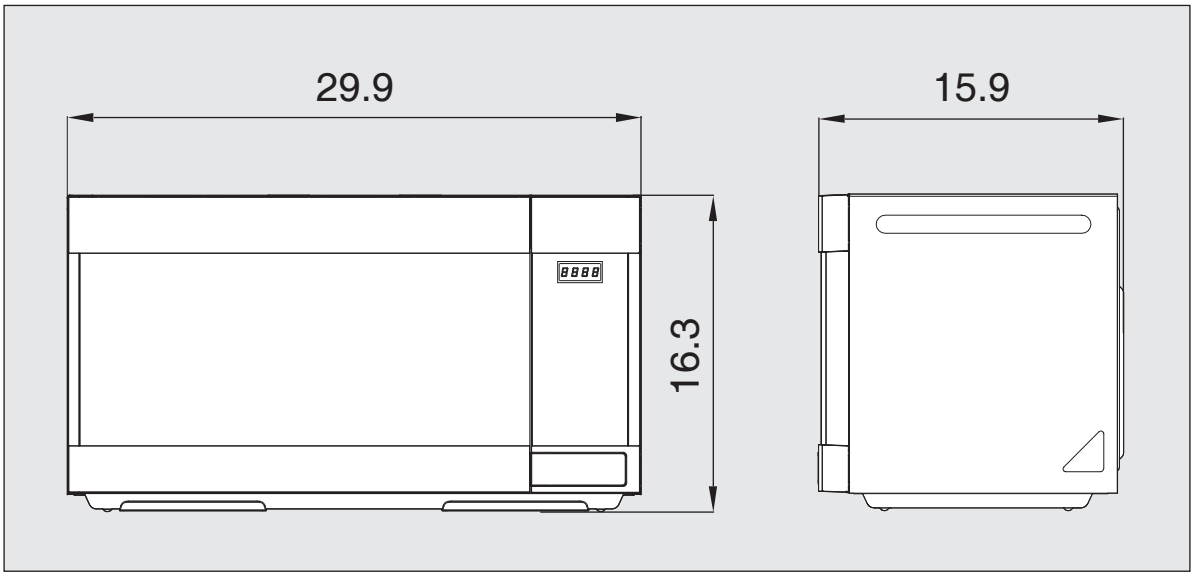

FEATURES DIAGRAM

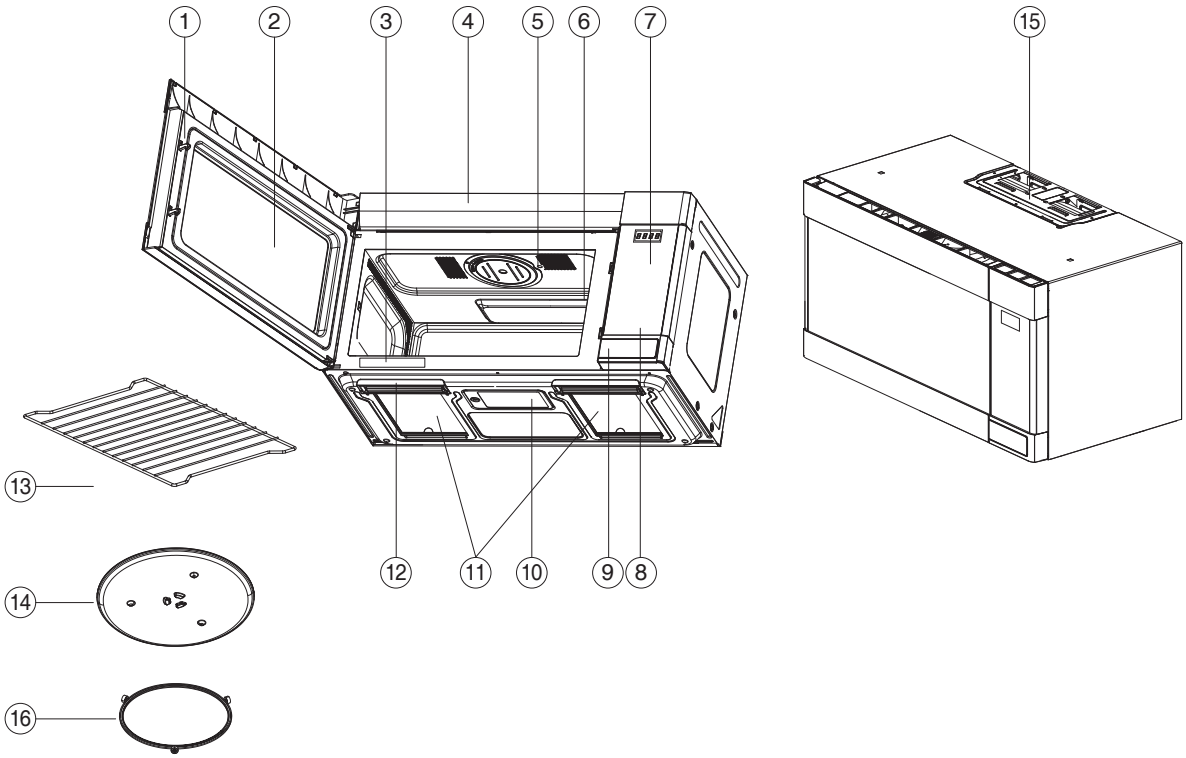

① **DOOR LATCHES**

② **WINDOW with METAL SHIELD -** Screen allows cooking to be viewed while keeping microwaves confined in oven.

③ **MODEL NUMBER PLATE -** Located on the front wall of the microwave oven.

④ **CHARCOAL FILTER (behind Vent Grille)**

⑤ **OVEN LIGHT**

⑥ **WAVEGUIDE COVER**
Protects the microwave outlet from splashes of cooking foods.

⑦ **TOUCH CONTROL PANEL and DIGITAL DISPLAY** - For detailed information on each feature, see Features Diagram section, page 11, 12.

⑧ **HOOD CONTROLS**
Vent Fan - Press High, Low or Off.
Light - Press On or Off

⑨ **DOOR BUTTON -** To open the door push the door open button.

⑩ **COOKTOP LIGHT**

⑪ **GREASE FILTERS**

⑫ **HANDLE FILTERS -** Use to insert Grease Filters.

⑬ **METAL RACK -** Use for extra space when cooking with more than one container at the same time.

⑭ **TURNTABLE / GLASS TRAY -** Composed of glass tray and roller guide. The roller guide is placed first in the bottom of the microwave and supports the glass tray. Both parts must be in place when using the microwave oven.

⑮ **VENTILATION MOTOR -** Your microwave oven is designed for adaptation to the following three types of ventilation.
(Recirculation ventilation system, Vertical ventilation system,Horizontal ventilation system)
See installation manual to Select the type of ventilation required for your installation.

⑯ **Guide Roller Ring**

FEATURES DIAGRAM

The Touch Control Panel allows you to set the oven controls with the press of a finger.
It's designed to be easy to use and understand.

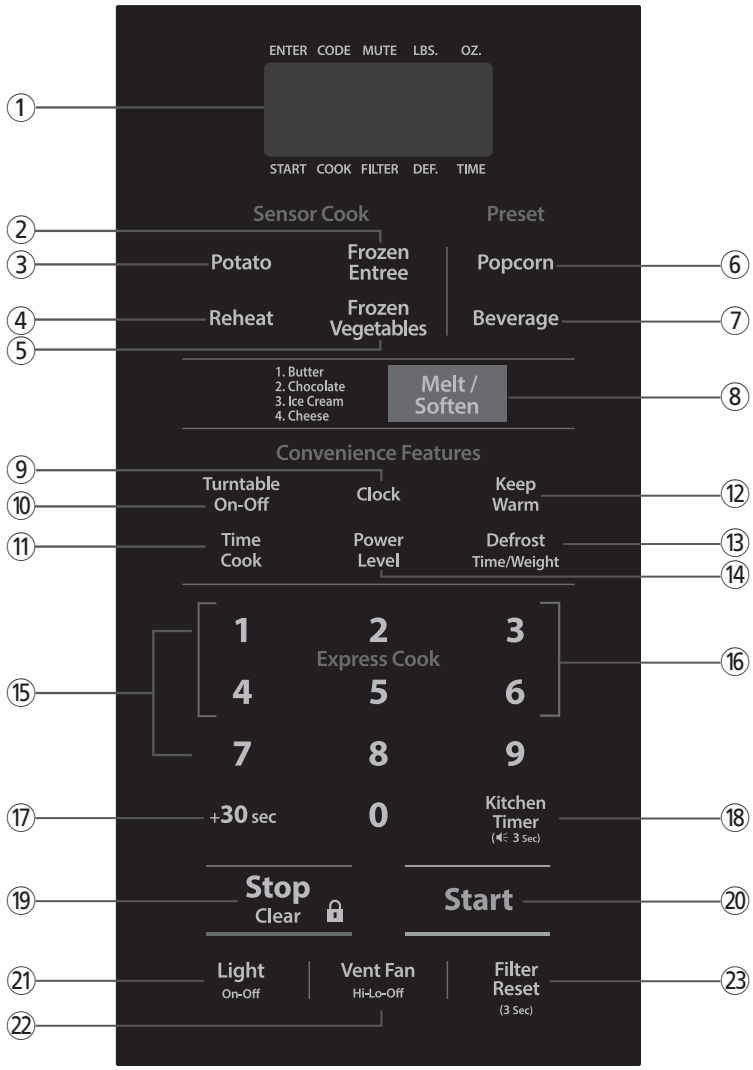

◆ Each time a pad is pressed, a BEEP will sound.

◆ When **STOP/CLEAR** Pad is pressed during oven operation, the oven will stop, however, all programmed information is retained. To clear all information, press the **STOP/CLEAR** Pad again.

FEATURES DIAGRAM

① **DISPLAY -** Displays time of day, time or power level being used, cooking mode and instructions.

② **FROZEN ENTREE -** Press this pad to cook Frozen Entree. The microwave oven sensor will automatically adjust the cooking time to the type and amount of food.

③ **POTATO -** Press this pad to cook Potato. The microwave oven sensor will automatically adjust the cooking time to the type and amount of food.

④ **REHEAT -** Press this pad to reheat food. The microwave oven sensor will automatically adjust the cooking time to the type and amount of food.

⑤ **FROZEN VEGETABLES -** Press this pad to cook Frozen vegetables. The microwave oven sensor will automatically adjust the cooking time to the type and amount of food.

⑥ **POPCORN -** Press this pad to cook prepackaged microwave popcorn weight 3.5/3.0/1.75 ounces.

⑦ **BEVERAGE -** Press this pad to reheat a beverage.

⑧ **MELT/SOFTEN -** Press this pad to melt or soften Butter, Chocolate, Ice Cream and Cheese.

⑨ **CLOCK -** Press this pad to enter time of day.

> Also press and hold this pad for 3 seconds to set power save mode. For detailed information on this feature, see Controls section, page 26.

⑩ **TURNTABLE On-Off -** Press this pad to turn turntable on or off.

⑪ **TIME COOK -** Press this pad to set the Microwave cooking time.
- ◆ Power Level 10 (High) is automatic but lower heat levels may be programmed.

⑫ **KEEP WARM -** Press this pad and safely keep food warm for up to 30 minutes.

⑬ **DEFROST -** Press this pad to set defrosting time or defrosting weight.

⑭ **POWER LEVEL -** Press this pad if you want to change from automatic Power Level 10 (High) for cooking.

⑮ **NUMBER PADS -** Press these pads to enter cooking time, defrosting time or weight, time of day, power level.

⑯ **EXPRESS COOK -** Press these pads to set 1-6 minutes preset cooking time at 100% power level.

⑰ **+30 SEC -** Press this pad for 30 seconds instant "ON" cooking time or to add 30 seconds of cooking time as the timer is counting down.

⑱ **KITCHEN TIMER -** Press this pad to use as a minute timer, delay cooking, hold setting after cooking.

> Also press and hold this pad for 3 seconds to set sound on/off. For detailed information on this feature, see Controls section, page 26.

⑲ **STOP/CLEAR -** When pressed once, it pauses the oven operation. When pressed twice, it resets the oven and erases all settings (except time of day)

> Also press and hold this pad for 3 seconds to set child safety lock function. For detailed information on this feature, see Controls section, page 26.

⑳ **START -** After all selections are made, press this pad to start the oven or timer.

㉑ **LIGHT -** Press this pad to turn on or off the cooktop light.

㉒ **VENT FAN -** Press this pad to turn the fan on high, low or off.

㉓ **FILTER RESET -** Press and hold this pad for 3 seconds to reset time after replacing the filter.
Charcoal filters must be replaced every 6 months.

OPERATION PROCEDURE

This section includes useful information about oven operation.

1 Plug power supply cord into a standard 3-pronged 15 Amps 120V AC 60Hz power outlet.

2 After placing the food in a suitable container, open the oven door and put it on the glass tray. The glass tray and roller guide must always be in place during cooking.

3 Close the door. Make sure that it is firmly closed.

4 The oven light is on when the microwave oven is operating.

5 The oven door can be opened at any time during operation by pushing the door open button of control panel. The oven will automatically stop.

6 Each time a pad is pressed, a BEEP will sound to acknowledge the press.

7 The oven automatically cooks on full power unless set to a lower power level.

8 The display will show " : 0" when the oven CLOCK is not set.

9 Time clock returns to the present time when the cooking time ends.

10 When the STOP/CLEAR pad is pressed during the oven operation, the oven stops cooking and all information retained. To erase all information(except the present time), press the STOP/CLEAR pad once more. If the oven door is opened during the oven operation, all information is retained.

11 If the START pad is pressed and the oven does not operate, check the area between the door and door seal for obstructions and make sure the door is closed securely. The oven will not start cooking until the door is completely closed or the program has been reset.

Make sure the oven is properly installed and plugged into the electrical outlet.

TO SET POWER LEVEL

- The power-level is set by pressing the Power Level pad and number pad. If you wish to use a different power level, press the POWER LEVEL pad before pressing START pad. Enter the power level desired by pressing the appropriate number pad. The chart shows the display, the power level and the percentage of power.

PRESS POWER PAD AND NUMBER	POWER LEVEL (DISPLAY)	APPROXIMATE PERCENTAGE OF POWER
POWER LEVEL + 1 + 0	PL10	100%
POWER LEVEL + 9	PL-9	90%
POWER LEVEL + 8	PL-8	80%
POWER LEVEL + 7	PL-7	70%
POWER LEVEL + 6	PL-6	60%
POWER LEVEL + 5	PL-5	50%
POWER LEVEL + 4	PL-4	40%
POWER LEVEL + 3	PL-3	30%
POWER LEVEL + 2	PL-2	20%
POWER LEVEL + 1	PL-1	10%
POWER LEVEL + 0	PL-0	0%

NOTE : If "PL-0" is selected, the oven will work with the fan but no power. You can use this level to remove odors.

SETTING THE CLOCK

When the oven is first plugged in, the display will show " : 0" and a tone will sound. If the AC power ever goes off, the display show “ : 0” when the power comes back on.

Clock

1. Press the CLOCK pad.
   This is a 12 hour clock system.

   The ENTER, TIME indicators blink and "12H" is displayed.

2. Press the CLOCK pad once more.
   This is a 24 hour clock system.

   NOTE : This oven has multiple clock systems. If you want 12 hour clock system, omit this step.

3. Enter the correct time of day by pressing the number pads in sequence.

4. Press the CLOCK pad.

   The display stops blinking, and the colon starts blinking. If you selected 12 hour clock system, this digital clock allows you to set from 1:00 to 12:59. If you selected 24 hour clock system, this digital clock allows you to set from 0:00 to 23:59.

NOTE:
1. If you attempt to enter an incorrect time, the time will not be set and a error signal tone will sound. Press the CLOCK pad and re-enter the time.
2. If you want to set power save mode, press and hold CLOCK pad for 3 seconds. For detailed information on this feature, see Controls section, page 26.

KITCHEN TIMER MODE

Timer operates as a minute timer.
Timer operates without microwave energy.

HOW TO USE AS A MINUTE TIMER

Kitchen Timer
(3 Sec)

1. Press KITCHEN TIMER pad.

   The ENTER, TIME indicators blink and “ : 0” is displayed.

2. Press the amount of time you want to count down.

   The display will show what you pressed.

3. Press START pad.

When you press the START pad, the TIME indicator starts blinking and the display counts down the time remaining in KITCHEN TIMER mode.
When KITCHEN TIMER mode ends, you will hear 3 beeps.

NOTE: If you want to turn sound on or off, press and hold KITCHEN TIMER pad for 3 seconds. For detailed information on this feature, see Controls section, page 26.

KITCHEN TIMER MODE (CONTINUED)

HOW TO USE TO DELAY THE START OF COOKING

Kitchen Timer (3 Sec)

1. Press KITCHEN TIMER pad.

The ENTER, TIME indicators blink and " : 0" is displayed.

2. Press the amount of time you want to delay.

The display will show what you pressed.

Time Cook

3. Press TIME COOK pad to program the desired cooking time for food to be cooked.

4. Press START pad.

When you press START pad, the TIME indicator starts blinking and the display counts down the time remaining in KITCHEN TIMER mode. When KITCHEN TIMER mode ends, the oven will beep. The TIME indicator goes off and COOK indicator starts blinking. The display counts down the time remaining in MICROWAVE mode. When MICROWAVE cook ends, you will hear 3 beeps.

HOW TO USE TO SET A HOLDING TIME

Time Cook

1. Press TIME COOK pad to program the desired cooking time for food to be cooked.

Kitchen Timer (3 Sec)

2. Press KITCHEN TIMER pad.

The ENTER, TIME indicators blink and " : 0" is displayed.

3. Press the amount of time you want the oven to hold.

The display will show what you pressed.

4. Press START pad.

When you press the START pad, the COOK indicator starts blinking and the display counts down the time remaining in MICROWAVE mode. When the MICROWAVE cook ends, the oven will beep. The COOK indicator goes off and TIME indicator starts blinking. The display counts down the time remaining in KITCHEN TIMER mode. When the KITCHEN TIMER mode ends, you will hear 3 beeps.

NOTE : Your oven can be programmed for 99 minutes 99 seconds. (99:99)

TIME DEFROSTING

When TIME DEFROST is selected, the automatic cycle divides the defrosting time into periods of alternating defrost and stand times by cycling on and off.

Defrost
Time/Weight

1. Press DEFROST pad once.

   The DEF indicator lights and ENTER, TIME indicators blink, “ : 0” is displayed.

2. Press number pads for the desired defrosting time.

   The display will show what you pressed.

   NOTE : Your oven can be programmed for 99 minutes 99 seconds. (99:99)

3. Press START pad.

When you press START pad, the DEF indicator starts blinking to show the oven is in the TIME DEFROST mode. The display counts down the time to show you how much defrosting time is left in the TIME DEFROST mode. The oven beeps during the defrosting cycle to signal that the food needs to be turned or rearranged. When the defrosting time ends, you will hear 3 beeps.

WEIGHT DEFROSTING

WEIGHT DEFROST lets you easily defrost food by eliminating guesswork in determining defrosting time.
Follow the steps below for easy defrosting.

Defrost
Time/Weight

1. Press DEFROST pad twice.

   The DEF. indicator lights and ENTER, LBS indicators blink, "0.0" is displayed.

2. Press number pads for the desired defrosting weight.

   The display will show what you pressed.

   NOTE : Your oven can be programmed for 0.2 to 6.0 lbs.

3. Press START pad.

The defrosting time is automatically determined by the weight selected.
When you press START pad, the DEF indicator starts blinking and the defrosting time counts down in the display window. The oven beeps during the defrosting cycle to signal that the food needs to be turned or rearranged. When the defrosting time ends, you will hear 3 beeps.

MELT/SOFTEN

The melt/soften feature can be used to melt or soften butter, chocolate, ice cream and cheese.
See the chart for specific settings to use.

Melt / Soften

1. Press MELT/SOFTEN pad once for butter, twice for chocolate, three times for ice cream, four times for cheese.
2. Press START pad.

The display will show what you pressed.

MELT/SOFTEN ITEM CHART

PRESS PAD	DISPLAY	SOFTEN ITEM	WEIGHT
once	S--1	Butter	1/2 cup
twice	S--2	Chocolate	8 oz.
Three Times	S--3	Ice Cream	1/2 gallon
Four Times	S--4	Cheese	1 plate

KEEP WARM

KEEP WARM feature maintains food at a warm temperature for 30 minutes.

Keep Warm

1. Press KEEP WARM pad.
2. Press START pad.

When pressing KEEP WARM pad, the display shows "30:00".

When the cooking time ends, you will hear 3 beeps.

TIME COOK

Time Cook	1. Press TIME COOK pad.	The COOK indicator lights and ENTER, TIME indicators blink., “ : 0” is displayed.
	2. Press number pads for the cooking time.	The display will show what you pressed.
Power Level	3. Press POWER LEVEL pad.	The display will show PL10 for 100% power.
	4. Press number pads for power level (0~10).	The display will show PL-0 ~ PL10.
	5. Press START pad.	If you skip 3 and 4 step, 100% power is automatic.

NOTE : Your oven can be programmed for 99 minutes 99 seconds. (99:99)

When you press START pad, the COOK indicator starts blinking to show the oven is cooking.
The display counts down the time to show how much cooking time is left. When the cooking time ends, you will hear 3 beeps.

NOTE : Using lower power levels increases the cooking time which is recommended for foods such as cheese, milk and slow cooking of meats.

COOKING IN TWO STAGES

This feature lets you program two sequential operations such as defrosting and cooking or cooking using two different power levels. It automatically changes power settings and cooking time.

Defrosting + Cooking

Defrost Time/Weight	1. Press Defrost pad once.	The DEF indicator lights and ENTER, TIME indicators blink, “ : 0” is displayed.
	2. Press number pads for the defrosting time you want.	The display will show what you pressed.
Time Cook	3. Press TIME COOK pad.	The COOK indicator lights and ENTER, TIME indicators blink., “ : 0” is displayed.
	4. Press number pads for the cooking time.	The display will show what you pressed.
Power Level	5. Press POWER LEVEL pad.	The display will show PL10 for 100% power.
	6. Press number pads for power level (0~10)	The display will show PL-0 ~ PL10
	7. Press START pad.	If you skip 5 and 6 step, 100% power is automatic.

NOTE : Your oven can be programmed for 99 minutes 99 seconds. (99:99)

When you press START pad, the DEF and COOK indicators come on to confirm the power levels selected. The DEF indicator starts blinking to show you that the oven is in TIME DEFROST mode.
The display counts down the time remaining in TIME DEFROST mode. When the oven beeps, turn over, break apart and/or redistribute the food. At the end of TIME DEFROST mode, the oven will beep and start MICROWAVE cook.
The DEF indicator goes off and the COOK indicator starts blinking. The display counts down the time remaining in MICROWAVE mode. When MICROWAVE cook ends, you will hear 3 beeps.

COOKING IN TWO STAGES (CONTINUED)

Cooking + Cooking

Time Cook	1. Press TIME COOK pad.	COOK indicator lights and ENTER, TIME indicators blink. “ : 0” is displayed.
	2. Press number pads for the cooking time.	The display will show what you pressed.
Time Cook	3. Press TIME COOK pad.	The COOK indicator lights and ENTER, TIME indicators blink., “ : 0” is displayed.
	4. Press number pads for the cooking time.	The display will show what you pressed.
Power Level	5. Press POWER LEVEL pad.	The display will show PL10 for 100% power.
	6. Press number pads for power level (0~10)	The display will show PL-0 ~ PL10
	7. Press START pad.	If you skip 5 and 6 step, 100% power is automatic.

NOTE : Your oven can be programmed for 99 minutes 99 seconds. (99:99)

When you press START pad, the COOK indicator starts blinking to show the oven is in cook for stage 1.
At the end of stage 1, the oven will beep and start stage 2. The display counts down the time remaining in stage 2 mode. When stage 2 ends, you will hear 3 beeps.

+30 SEC

+30 sec allows you to reheat for 30 seconds at 100% (full power) by simply pressing the +30 sec pad. By repeatedly pressing the +30 sec pad, you can also extend reheating time to 99 minutes 99 seconds by 30 second increments.

1. Press the +30 sec pad.

When you press the +30 sec pad, ":30" is displayed and the oven starts reheating.

NOTE :
+30 SEC cannot be used while the sensor is detecting the vapor emitted from the food during sensor cooking such as Potato, Frozen Entree, Frozen Vegetables or Sensor Reheat.

EXPRESS COOK

Express Cook is a quick way to set cooking time from 1-6 minutes at 100% (full power).

1. Press one of the Express Cook pads (from 1-6) for 1-6 minutes of cooking at 100% (full power).

The display will show what you pressed.
After 1.5 seconds, the display is changed into cooking time and the oven starts cooking.

ONE TOUCH COOK(PRESET)

One touch cooking allows you to cook or reheat many of your favorite foods by pressing just one pad.
To increase quantity, press the chosen pad until the number in the display is same as desired quantity to cook.

Popcorn

1. Press POPCORN pad once for 3.5 oz bag, twice for 3.0 oz bag or three times for 1.75 oz bag.
2. Press START pad.

When you press POPCORN pad once, “ 3.5 ” is displayed.

NOTE : 1. Use prepackaged room-temperature microwave popcorn.
2. Place bag in oven according to manufacturer’s directions.
3. Pop only one bag at a time.
4. After popping, open bag carefully: popcorn and steam are extremely hot.
5. Do not reheat unpopped kernels or reuse bag.
6. Do not leave oven unattended while popping popcorn.

CAUTION : If prepackaged popcorn is of a different weight than the recommended weight, do not use the popcorn pad. Follow the manufacturer instruction.

CAUTION

DO NOT leave the microwave oven unattended while popping corn.
When popping commercially packaged popcorn, remove the rack from the oven.
Do not place the bag of microwave popcorn on the rack or under the rack.

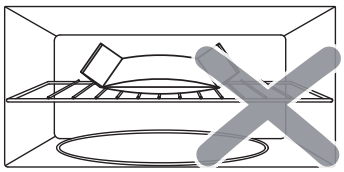
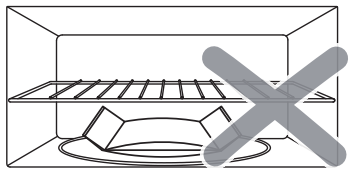
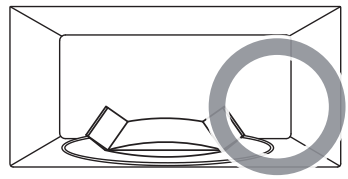

Beverage

1. Press BEVERAGE pad once for 1 cup, twice for 2 cups or three times for 3 cups.
2. Press START pad.

When you press BEVERAGE pad once, “ 1 ” is displayed.

*** BEVERAGE * : 7 oz/cup(mug)**
- 1 cup (7 oz total volume) : Press BEVERAGE once.
- 2 cups(14 oz total volume) : Press BEVERAGE twice.
- 3 cups(20 oz total volume) : Press BEVERAGE three times.

SENSOR OPERATIONS

The Sensor Cook categories are designed to detect the increasing humidity released by the food during the cooking process. The microwave oven sensor will automatically adjust the cooking time to the type and amount of food.

Using Sensor Settings

1. After the oven is plugged in, wait 2 minutes before using Sensor Cook.

2. Be sure the exterior of the cooking container and the interior of the oven are dry. Wipe off any moisture with a dry cloth or paper towel.

3. The oven works with foods at normal storage temperature.

4. More or less food than the quantity listed in the chart should be cooked following the guidelines in any microwave cookbook.

5. Do not open the oven door or press STOP/CLEAR pad until cooking time appears on the display window. The measurement of vapor will be interrupted. If this occurs, an error message "Er01" will appear. To continue cooking, press the STOP/CLEAR pad and cook manually.

   When the sensor detects the vapor emitted from the food, the remainder of cooking time will appear.
   The door may be opened when remaining cooking time appears on the display. At this time, you may stir or season food, as desired.

6. Always use microwave-safe containers and cover them with loose fitting lids or vented plastic wrap. Never use tight sealing plastic containers. They will prevent steam from escaping and this will mislead the sensor, usually causing the food to overcook.

7. Check food for temperature or doneness after cooking. **If food is not completely cooked, enter additional cooking time manually.** Do not use one of the Sensor Cook categories twice in succession on the same food portion. This may result in severely overcooked or burnt food.

Covering Foods

Some foods work best when covered. Use the cover recommended in the Sensor Cook Chart for these foods.

1. Casserole lid.

2. Plastic wrap : Use plastic wrap recommended for microwave cooking. Cover dish loosely; allow approximately 1/2 inch to remain uncovered to allow steam to escape. Plastic wrap should not touch food.

3. Wax paper : Cover dish completely; fold excess wrap under dish to secure. If dish is wider than paper, overlap two pieces at least one inch to cover.

Be careful when removing any covering to allow steam to escape away from you.

SENSOR COOK

Sensor is semi-conductor device that detects the vapor emitted from the food as it heats. The sensor adjusts the cooking time and power level for various food and quantities and you don't need to enter the weight or quantity of the food.

Potato	1. Press POTATO pad. 2. Press START pad.	When you press POTATO pad, "SCPO" is displayed. When the sensor detects the vapor emitted from the food, the remainder of cooking time will appear.
Frozen Entree	1. Press FROZEN ENTREE pad. 2. Press START pad.	When you press FROZEN ENTREE pad, "SCFE" is displayed. When the sensor detects the vapor emitted from the food, the remainder of cooking time will appear.
Frozen Vegetables	1. Press FROZEN VEGETABLES pad. 2. Press START pad.	When you press FROZEN VEGETABLES pad, "SCFU" is displayed. When the sensor detects the vapor emitted from the food, the remainder of cooking time will appear.
Reheat	1. Press REHEAT pad. 2. Press START pad.	When you press REHEAT pad, "SrH" is displayed. When the sensor detects the vapor emitted from the food, the remainder of cooking time will appear.

SENSOR COOK CHART

PRESS PAD	DISPLAY	WEIGHT	COMMENTS
Potato	SCPO	8 - 24 oz	Before cooking, pierce potato skin with fork 5-6 times. Place potatoes on the turntable.
Frozen Entree	SCFE	8 - 32 oz	Follow the directions that is specific for the microwave oven that is printed on the packaging.
Frozen Vegetables	SCFU	6 - 16 oz	2-4 tbsp water per serving. Cover with lid or vented plastic wrap.
Reheat	SrH	4 - 36 oz	For casseroles, add 2-3tbsp water, cover with lid or vented plastic wrap. • The food type to avoid, Beverage Frozen pizza or Frozen food, Raw food, Biscuits, cake

NOTE
Do not use the Sensor Cook twice in succession on the same food portion.
This may result in severely over-cooked or burnt food.
If additional time is needed after previous cooking, use one of the +30sec pads or TIME COOK pads.
- Use proper container and cover for best sensor cooking result.
- Always use microwave- safe container and cover them with lid or vented plastic wrap. Never use tight sealing plastic containers - They can be prevent steam from escaping and cause food to overcook.
- Be sure the outside of the cooking containers and the inside of the microwave oven are dry before placing food in the oven.

TURNTABLE ON-OFF

For best cooking result, the turntable should be on. However the turntable can be turned off so that it does not rotate when extra large dishes are used.

Turntable On-Off	1. TURNTABLE On-Off pad.	The options are displayed for 2 seconds.

NOTE :
1. This option is not available in sensor cook, one touch cook, defrost and melt/soften modes.
2. Sometimes the turntable can become too hot to touch. Be careful touching the turntable during and after cooking.
3. Do not run the oven empty.

VENT FAN

The vent fan removes steam and other vapors from surface cooking. You can control the 2-speed fan by pressing the VENT FAN pad.

Vent Fan Hi-Lo-Off	1. Press VENT FAN pad once for high fan speed, twice for low fan speed or three times to turn the fan off.	The options are displayed for 2 seconds.

NOTE :
1. High fan speed can not be used together with microwave cooking.
2. An automatic fan feature protects the microwave from too much heat rising from the cooktop below it. It automatically turns on for low speed if it senses too much heat. If you have turned the fan on you may find that you cannot turn it off. The fan will automatically turn off when the internal parts are cool.
3. If there is no user input for 10 hours, cooktop light and vent fan will turn off automatically to save energy.

COOKTOP LIGHT

You can control the light by pressing the LIGHT pad.

Light On-Off	1. Press LIGHT pad once to turn the light on or twice to turn the light off.	The options are displayed for 2 seconds.

NOTE : If there is no user input for 10 hours, cooktop light and vent fan will turn off automatically to save energy.

MUTE

Kitchen Timer (3 Sec)

Audible signals are available to guide you when setting and using your oven.
To mute, press KITCHEN TIMER pad for 3 seconds. The MUTE indicator lights. To sound on, press KITCHEN TIMER pad for 3 seconds. A beep sounds and the MUTE indicator will be turned off.

FILTER RESET

Filter Reset (3 Sec)

If your oven is vented to the inside, the charcoal filter should be replaced approximately every 6 months. The charcoal filter can not be cleaned.
The FLITER indicator will light up when is time to replace the charcoal filter.
Press and hold FILTER RESET pad for 3 seconds after replacing the filter.
See page 31.

TO SET POWER SAVE MODE

Stop Clear

1. Press the STOP/CLEAR pad.
   " :0" or clock appears in the display.

Clock

2. Press and hold the CLOCK pad for 3 seconds.
   The display will turn off and a beep sounds.
   To operate the oven in power save mode, press any key.
   Then " :0" or clock will be shown and the operation of all function key will be same as in the normal mode.
   But if there is no operation within 10 seconds in clear mode, all the contents of display will disappear.

3. To cancel power save mode simply repeat setting procedure. When the display is on.
   The power save mode will be canceled and a beep sounds.
   The oven is again available for normal use.

CHILD SAFETY LOCK

Stop Clear

Child safety lock feature may lock the control panel to prevent the oven from being accidentally started or used by children. To lock, press and hold STOP/CLEAR pad for 3 seconds.
A beep sounds and "Loc" will be displayed for 3 seconds.
To unlock, press and hold STOP/CLEAR pad for 3 seconds. A beep sounds.

NOTE :
1. While the Child Lock is active, only the STOP/CLEAR pad works to unlock it.
2. Microwave oven cannot be used while Child Lock is activated.

TO STOP THE OVEN WHILE THE OVEN IS OPERATING

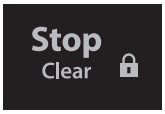

1. Press the STOP/CLEAR pad.
   - You can restart the oven by pressing the START pad.
   - Press the STOP/CLEAR pad once more to erase all instructions.
   - You must enter in new instructions.

2. Open the door.
   - You can restart the oven by closing the door and pressing the START pad.

NOTE : Oven stops operating when door is opened.

METAL RACK

The metal rack gives you extra space when cooking in more than one container at the same time.
The rack allows several foods to be cooked or reheated at one time.
However, for the best cooking and reheating, use TURNTABLE ON function and cook with SENSOR COOK modes without the rack. When the rack is used, set time and power level manually.
The oven is again available for normal use.

To avoid risk of property damage:

1. Do not use rack to pop popcorn.
2. Rack must be on the four plastic supports when used.
3. Use the rack only when cooking food on rack position.
4. Do not cook with rack on floor of the oven.

To use metal rack:

1. Place rack securely on the four plastic supports.
   Rack MUST NOT touch metal walls or back of microwave oven.
   Allow plenty of space around and between the dishes. Pay close attention to the cooking and reheating progress.
2. Place equal amounts of food both ABOVE AND BELOW rack.
   Amount of food must be approximately the same to balance out cooking energy.
3. Reposition the foods and reverse them from the rack to turntable and stir them at least once during any cooking or reheating time.
   After cooking or reheating, stir if possible. Using a lower power level will assist in better cooking and reheating uniformity.

IMPORTANT:

To avoid oven damage, DO NOT store or use the metal rack in this oven unless more than one item is being cooked or a recipe calls for it.

Recommended Usage

1. Soups
2. Casseroles
3. Dinner Plates

CARE AND CLEANING

WARNING:
The oven should be cleaned regularly and any food deposits removed.
Failure to maintain the oven in a clean condition could lead to deterioration of the surface that could adversely affect the life of the appliance and possibly result in a hazardous situation.

MICROWAVE OVEN INTERIOR

Disconnect the power cord before cleaning or leave the door open to inactivate the oven during cleaning.

The oven interior should be cleaned after each use with a damp cloth to keep it free from grease and soil buildup. Stubborn soils can be removed with a plastic scrub pad. When cleaning interior surfaces and surfaces of door and oven that come together when the door is closed, use only mild, non-abrasive soaps or detergents applied with a sponge or soft cloth.
Odors can be eliminated from the inside of the oven by boiling a solution of one cup of water and several tablespoons of lemon juice in the oven for 5-7 minutes. This also helps loosen any dried soil in the oven. Wipe off excess moisture after use.

NOTE :
- Do not spray or pour liquid cleansers directly onto a surface. Spray or pour cleanser onto a cloth or sponge and then clean.
- Do not use abrasive cleaners, oven cleaners, abrasive cleaning pads or steel wool, as they can scratch or dull oven surfaces.
- Do not remove or insert knife around the stirrer cover to clean, it may damage the cover or affect the cooking performance of your oven.

OVEN BOTTOM

Wash oven bottom with hot sudsy water, rinse and dry. Do not use excessive amounts of water when cleaning the oven, especially around the turntable. Do not allow water or cleaning agents to seep into turntable gears located underneath.

GLASS TRAY/TURNTABLE

Allow to cool before removing and cleaning. Wash in soapy water or dishwasher.

METAL RACK

Wash the metal rack with a mild soap and a soft or nylon scrub brush.
Dry completely.
Do not use abrasive scrubbers or cleaners to clean rack.

ROLLER GUIDE

Clean frequently to prevent excessive noise. Wash in soapy water or dishwasher.

OVEN EXTERIOR

Wipe the outside of your oven with a soapy cloth, rinse and dry. Do not use abrasive cleaners. They may scratch the surface.

LIGHT COMPARTMENT

Clean off the grease and dust on the light compartment cover on the bottom side of the microwave oven often with warm water and detergent.

CONTROL PANEL

Wipe with a damp cloth. Dry. Do not spray cleaners directly on panel. Spray cleaners on cloth and then wipe.

WAVEGUIDE COVER

The waveguide cover is located on the right side wall of the oven cavity. It is made from mica so requires special care. Keep the waveguide cover clean to assure good oven performance. Carefully wipe with a damp cloth any food spatters from the surface of the cover immediately after they occur. Built-up splashes may overheat and cause smoke or possibly catch fire. DO NOT REMOVE THE WAVEGUIDE COVER.

THE EXHAUST FEATURE

The exhaust hood feature on your microwave oven is equipped with two metal filters which collect grease. When the fan is being operated, air is drawn up through the filters and is then discharged through the venting to the outside or through the charcoal filters if not vented to the outside.

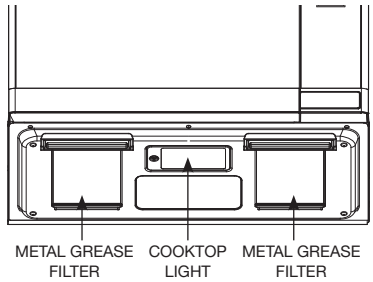

REUSABLE GREASE FILTERS

The reusable grease filters should be cleaned at least once a month. Never operate the microwave without the filters in place. In situations where flaming might occur on surfaces below the hood, filters will stop the entry of flames into the unit.

TO REMOVE GREASE FILTER

To remove the grease filter holder, pull the tab toward the front of the oven. Repeat for the other grease filter holder.
To remove the grease filter from the holder, pull using the "finger hold" to assist as shown in below image.

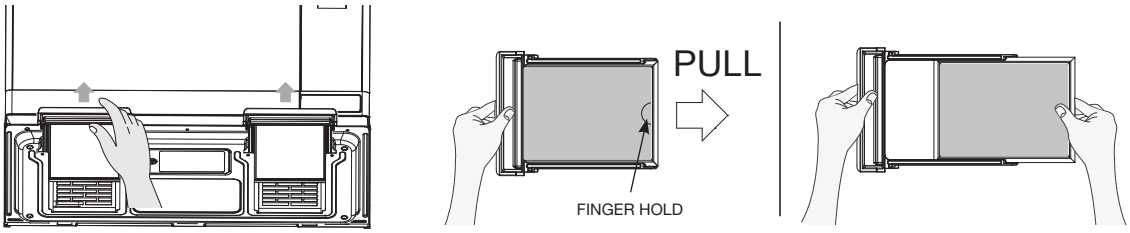

TO CLEAN GREASE FILTER

To clean grease filters, soak and then agitate filter in solution of hot water and detergent. Do not use ammonia or ammonia products because they will darken the metal. Light brushing can be used to remove embedded dirt. Rinse, shake and remove moisture before replacing.

TO REPLACE GREASE FILTER

To replace the grease filter, slide the grease filter into the grease filter holder. Insert the grease filter holder into the designated area of the bottom of the oven. Repeat for the other grease filter.

LIGHT REPLACEMENT

Cooktop Light

When replacing the cooktop light, make sure that you are wearing gloves to avoid injury from the heat of the lamp.

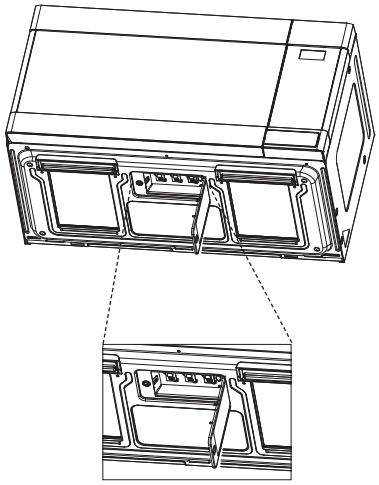

1. Unplug the oven or turn off the power at the main power supply.
2. Remove the screw from the light cover and lower the cover until it stops.
3. Remove the screw on center of the LED Light secured to the Cover and pull out terminal.
4. Replace with 1.0-watt LED light available from your authorized dealer and secure with screw.
   You can purchase LED cooktop light from 1-800-BE-SHARP.
5. Replace the light cover and mounting screw.
6. Turn the power back on at the main power supply.

Oven Light

When replacing the cooktop light, make sure that you are wearing gloves to avoid injury from the heat of the light.

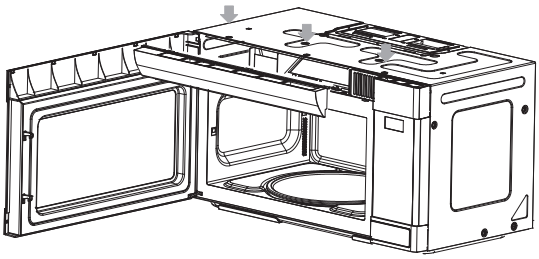

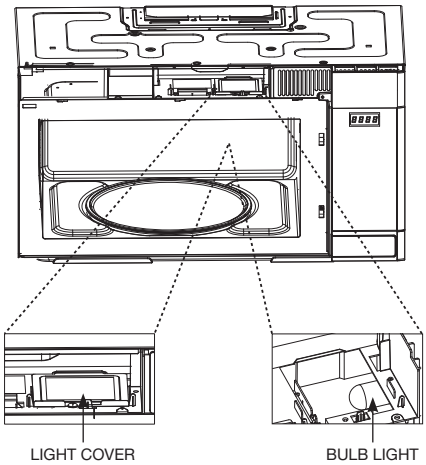

1. Unplug the oven or turn off the power at the main power supply.
2. Remove the vent grille mounting 3 screws and open the door.
3. Slide the grille air to the left, then pull it straight out.
4. Remove the charcoal filter, if present
5. Pull the hook a little and remove light cover.
6. Replace the light bulb with 30-watt bulb. available from your authorized dealer.
   You can purchase Oven Light from 1-800-BE-SHARP.
7. Replace the light cover.
8. Replace the grille air and 3 screws and close the door.
9. Plug the oven in or turn on the power at the main power supply.

INSTALL/REPLACE CHARCOAL FILTER

Charcoal Filter

If your oven is vented to the inside, the charcoal filter should be replaced if it is used for approximately 6 months.
You can purchase Charcoal Filter from 1-800-BE-SHARP.

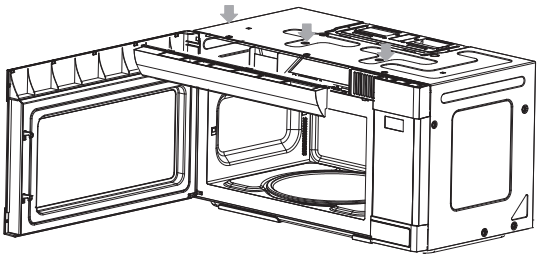

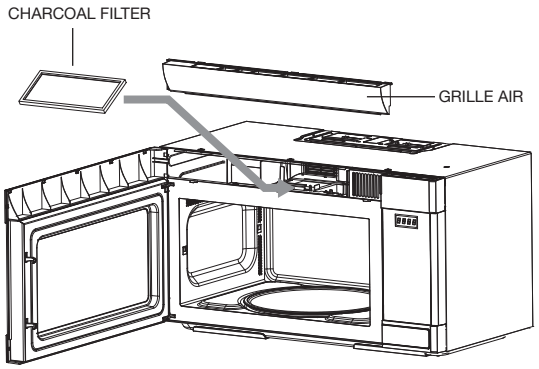

1. Unplug the oven or turn off the power at the main power supply.
2. Remove the grille air mounting 3 screws and open the door.
3. Slide the grille air to the left, then pull it straight out.
4. Push the charcoal filter backwards and remove it.
5. Slide a new charcoal filter into place. The filter should rest at the angle.
6. Replace the grille air and 3 screws and close the door.
7. Plug the oven in or turn on the power at the main power supply.

BEFORE YOU CALL

Check the following to be sure a service call is necessary:

If noting on the oven operates:
- check for a blown circuit fuse or a tripped main circuit breaker.
- check if oven is properly connected to electric circuit in house.
- check that controls are set properly.
- check that the cooking time is set.

If the oven interior light does not work:
- The LED light may be loose or defective. See page 29 or call a qualified servicer.

If oven will not cook:
- check that control panel was programmed correctly.
- check that door is firmly closed.
- check that **START Pad** was pressed.
- **Auto Start** may have been set.
- the **Control Lockout** may have been set
- check the area between the door and seal for obstructions.

If oven takes longer than normal to cook or cooks too rapidly:
- be sure the **Power Level** is programmed properly.
- check instructions on food density, etc.
- verify that voltage to the microwave oven is not low.

If the time-of-day clock does not always keep correct time:
- check that the power cord is fully inserted into the outlet receptacle.
- check that the oven is properly grounded.
- try plugging the oven into an outlet on a separate electrical circuit.

If oven floor or glass tray are hot:
- this is normal. The floor is absorbing heat from the food.

If the interior of oven collects moisture:
- this is normal. Food gives off moisture when cooking and the steam collects on the door and the oven surface. Wipe off excess moisture from oven after each use.

If food cooks unevenly:
- refer to your recipe for proper cooking procedures.
- be sure food is evenly shaped.
- be sure food is completely defrosted before cooking.
- check placement of aluminum strips used to prevent overcooking.

If food is undercooked:
- check recipe to be sure all directions (amount, time, and power levels) were correctly followed.
- check household voltage.
- try plugging the oven into an outlet on a separate electrical circuit.
- be sure food was completely defrosted before cooking.

If food is overcooked:
- check recipe to be sure all directions (amount, time, and power levels) were correctly followed.
- the initial temperature of food may have been higher than normal.

If arcing (sparks) occur:
- be sure microwave-safe dishes were used.
- be sure wire twist ties were not used.
- be sure oven was not operated when empty.

If the display shows a time counting down but the oven is not cooking:
- check that door is firmly closed.

QUESTIONS AND ANSWERS

*** Q : I accidentally ran my microwave oven without any food in it. Is it damaged?**

A : Running the oven empty for a short time will not damage the oven. However, it is not recommended.

*** Q : Can the oven be used with the glass tray or roller guide removed?**

A : No. Both the glass tray and roller guide must always be used in the oven before cooking.

*** Q : Can I open the door when the oven is operating?**

A : The door can be opened anytime during the cooking operation. Then microwave energy will be instantly switched off and the time setting will maintain until the door is closed.

*** Q : What does "Er01" message mean?**

A : "Er01" means SENSOR ERROR and will appear if you open the oven door or press STOP/CLEAR pad while cooking times is displayed. To continue cooking, press the STOP/CLEAR pad and cook manually.

*** Q : Why do I have moisture in my microwave oven after cooking?**

A : The moisture on the side of your microwave oven is normal. It is caused by steam from cooking food hitting the cool oven surface.

*** Q : Will the microwave oven be damaged if it operates while empty?**

A : Yes. Never run it empty.

*** Q : Why do eggs sometimes pop?**

A : When baking or poaching eggs, the yolk may pop due to steam build-up inside the yolk membrane. To prevent this, simply pierce the yolk with a toothpick before cooking. Never cook eggs without piercing their shells.

*** Q : Why is this standing time recommended after the cooking operation has been completed?**

A : Standing time is very important.
With microwave cooking, the heat is in the food, not in the oven. Many foods build up enough internal heat to allow the cooking process to continue, even after the food is removed from the oven. Standing time for joints of meat, large vegetables and cakes is to allow the inside to cook completely, without overcooking the outside.

*** Q : What does “standing time” mean?**

A : “Standing time” means that food should be removed from the oven and covered for additional time to allow it to finish cooking. This frees the oven for other cooking.

*** Q : Why does my oven not always cook as fast as the microwave cooking guide says?**

A : Check your cooking guide again, to make sure you’ve followed directions exactly ; and to see what might cause variations in cooking time. Cooking guide times and heat settings are suggestions, to help prevent over-cooking... the most common problem in getting used to a microwave oven.
Variations in the size, shape and weights and dimensions could require longer cooking time. Use your own judgement along with the cooking guide suggestions to check whether the food has been properly cooked just as you would do with a conventional cooker.

*** Q : Does microwave energy pass through the viewing screen in the door?**

A : No. The metal screen bounces back the energy to the oven cavity. The holes are made to allow light to pass through. They do not let microwave energy pass through.

*** Q : Can I operate my microwave oven without the turntable or turn the turntable over to hold a large dish?**

A : No. If you remove or turn over the turntable, you will get poor cooking results. Dishes used in your oven must fit on the turntable.

*** Q : Is it normal for the turntable to turn in either direction?**

A : Yes. The turntable rotates clockwise or counterclockwise, depending on the rotation of the motor when the cooking cycle begins.

*** Q : Can I pop popcorn in my microwave oven? How do I get the best results?**

A : Yes. Pop packaged microwave popcorn following manufacture’s guidelines. Do not use regular paper bags. Use the “listening test” by stopping the oven as soon as the popping slows to a “pop” every 1 or 2 seconds. Do not repop unpopped kernels. Do not pop popcorn in glass cookware.

UTENSIL GUIDE

Only use utensils that are suitable for use in microwave ovens.
To cook food in the microwave oven, the microwaves must be able to penetrate the food, without being reflected or absorbed by the dish used. Care must therefore be taken choosing the utensil. If the utensil is marked microwave-safe, you do not need to worry. The following table lists various utensil and indicates whether and how they should be used in a microwave oven.

UTENSIL	SAFE	COMMENTS
Aluminium foil	▲	Can be used in small quantities to protect areas against overcooking. Arcing can occur if the foil is too close to the oven wall or if too much foil is used.
Crisp Plate	●	Do not preheat for more than 8minutes.
China and earthenware	●	Porcelain, pottery, glazed earthenware and bone china are usually suitable, unless deco-rated with a metal trim.
Disposable polyester cardboard dishes	●	Some frozen foods are packaged in these dishes.
Fast-food packaging		
• Polystyrene cups containers	●	Can be used to warm food. Overheating may cause the polystyrene to melt.
• Paper bags or newspaper	×	May catch fire.
• Recycled paper or metal trims	×	May cause arcing.
Glassware		
• Oven-to-table ware	●	Can be used, unless decorated with a metal trim.
• Fine glassware	●	Can be used to warm foods or liquids. Delicate glass may break or crack if heated suddenly.
• Glass jars	●	Must remove the lid. Suitable for warming only.
Metal		
• Dishes	×	May cause arcing or fire.
• Freezer bag twist ties	×	
Paper		
• Plates, cups, napkins and Kitchen paper	●	For short cooking times and warming. Also to absorb excess moisture.
• Recycled paper	×	May cause arcing.
Plastic		
• Containers	●	Particularly if heat-resistant thermoplastic. Some other plastics may warp or discolour at high temperatures. Do not use Melamine plastic.
• Cling film	●	Can be used to retain moisture. Should not touch the food. Take care when removing the film as hot steam will escape.
• Freezer bags	▲	Only if boilable or oven-proof. Should not be airtight. Prick with a fork, if necessary.
Wax or grease-proof paper	●	Can be used to retain moisture and prevent spattering.

● : Recommended use
▲ : Limited Use
× : Not Recommended

USE YOUR MICROWAVE OVEN SAFELY

General Use

Do not attempt to defeat or tamper with safety interlocks.
Do not place any object between the oven front frame and the door or allow residue to build up on sealing surfaces. Wipe with a mild detergent, rinse and dry. Never use abrasive powders or pads.
Do not subject the oven door to strain or weight such as a child hanging on an open door.
This could cause the oven to fall forward resulting in injury to you and damage to the oven.

Do not operate the oven if door seals or sealing surfaces are damaged; or if door is bent; or if hinges are loose or broken.
Do not operate the oven empty. This will damage the oven.
Do not attempt to dry clothes, newspapers or other materials in the oven. They may catch on fire.
Do not use recycled paper products as they may contain impurities which may cause sparks or fires.
Do not hit or strike the control panel with hard objects. This can damage the oven.

Food

Never use your microwave oven for home canning. The oven is not designed for proper home canning. Improperly canned food may spoil and be dangerous to consume.
Always use the minimum recipe cooking time. It is better to undercook rather than overcook foods.
Undercooked foods can be returned to the oven for more cooking. If food is overcooked, nothing can be done.
Heat small quantities of food or foods with low moisture carefully. These can quickly dry out, burn or catch on fire.
Do not heat eggs in the shell. Pressure may build up and eggs can explode.
Potatoes, apples, egg yolks and sausages are examples of food with non-porous skins.
These must be pierced before cooking to prevent bursting.

Do not attempt to deep fat fry in your microwave oven.
Always allow a standing time of at least 20 seconds after the oven has been switched off to allow the temperature to even out, stir during heating, if necessary, and ALWAYS stir after heating. To prevent eruptive boiling and possible scalding, you should put a spoon or glass stick into the beverages and stir before, during and after heating.
Do not leave the oven unattended while popping corn.
Do not pop corn in a paper bag unless it is the commercially prepared Microwave Popcorn product. The kernels can overheat and ignite a brown paper bag.
Do not exceed the Microwave Popcorn manufacturers suggested popping time.
Longer popping does not yield more popcorn but it can result in scorch, burn of fire. Remember, the Popcorn bag and tray can be too hot to handle. Remove with caution and use pot holders.

ARCING

If you see arcing, open the door and correct the problem.

Arcing is the microwave term for sparks in the oven.
Arcing is caused by:

- Metal or foil touching the side of the oven.
- Foil not molded to food (upturned edges act like antennas).
- Metal, such as twist-ties, poultry pins, or gold rimmed dishes, in the microwave.
- Recycled paper towels containing small metal pieces being used in the microwave.
- Dirt or grease on waveguide cover.

MICROWAVING PRINCIPLES

Microwave energy has been used in this country to cook and reheat food since early experiments with RADAR in World War II. Microwaves are present in the atmosphere all the time, both naturally and manmade sources. Manmade sources include radar, radio, television, telecommunication links and car phones.

HOW MICROWAVES COOK FOOD

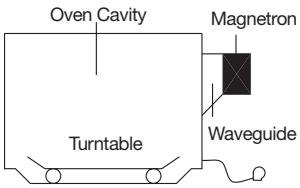

In a microwave oven, electricity is converted into microwave by the MAGNETRON.

▶TRANSMISSION

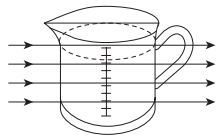

Then they pass through the cooking containers to be absorbed by the water molecules in the food, all foods contain water to a more or lesser extent.

▶REFLECTION

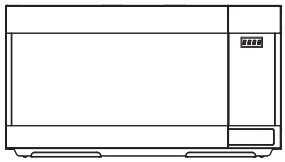

The microwaves bounce off the metal walls and the metal door screen.

▶ABSORPTION

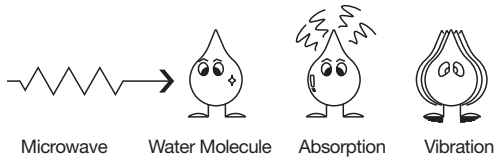

The microwaves cause the water molecules to vibrate which causes FRICTION, i.e. HEAT. This heat then cooks the food. Microwaves are also attracted to fat and sugar particles, and foods high in these will cook more quickly. Microwaves can only penetrate to a depth of 1½ - 2 inches(4-5cm) and as heat spreads through the food by conduction, just as in a traditional oven, the food cooks from the outside inwards.

CONVERSION CHARTS

WEIGHT MEASURES	
15 g	1/2 oz.
25 g	1 oz.
50 g	2 oz.
100 g	4 oz.
175 g	6 oz.
225 g	8 oz.
450 g	1 lb.

VOLUME MEASURES	
30 ml	1 fl.oz.
100 ml	3 fl.oz.
150 ml	5 fl.oz. (1/4 pt)
300 ml	10 fl.oz. (1/2 pt)
600 ml	20 fl.oz. (1pt)

SPOON MEASURES	
1.25 ml	1/4 tsp
2.5 ml	1/2 tsp
5 ml	1 tsp
15 ml	1 tbsp

FLUID MEASUREMENTS		
1 Cup	= 8 fl.oz	= 240 ml
1 Pint	= 16 fl.oz. (UK 20 fl.oz.)	= 480 ml (UK 560 ml)
1 Quart	= 32 fl.oz. (UK 40 fl.oz.)	= 960 ml (UK 1120 ml)
1 Gallon	= 128 fl.oz. (UK 160 fl.oz.)	= 3840 ml (UK 4500 ml)

COOKING TECHNIQUES

STANDING TIME

Dense foods e.g. meat, jacket potatoes and cakes, require standing time(inside or outside of the oven) after cooking, to allow heat to finish conducting to cook the center completely. Wrap meat joints and jacket potatoes in aluminium foil while standing. Meat joints need approx. 10-15 minutes, jacket potatoes 5 minutes. Other foods such as plated meal, vegetables, fish etc require 2-5 minutes standing. After defrosting food, standing time should also be allowed. If food is not cooked after standing time, return to the oven and cook for additional time.

MOISTURE CONTENT

Many fresh foods e.g. vegetables and fruit, vary in their moisture content throughout the season, particularly jacket potatoes. For this reason cooking times may have to be adjusted. Dry ingredients e.g. rice, pasta, can dry out during storage so cooking times may differ.

DENSITY

Porous airy foods heat more quickly than dense heavy foods.

CLING FILM

Cling film helps keep the food moist and the trapped steam assists in speeding up cooking times. Pierce before cooking to allow excess steam to escape. Always take care when removing cling film from a dish as the build-up of steam will be very hot.

SHAPE

Even shapes cook evenly. Food cooks better by microwave when in a round container rather than square.

SPACING

Foods cook more quickly and evenly if spaced apart. NEVER pile foods on top of each other.

STARTING TEMPERATURE

The colder the food, the longer it takes to heat up. Food from a fridge takes longer to reheat than food at room temperature.

LIQUIDS

All liquids must be stirred before and during heating. Water especially must be stirred before and during heating, to avoid eruption. Do not heat liquids that have previously been boiled. DO NOT OVERHEAT.

TURNING & STIRRING

Some foods require stirring during cooking. Meat and poultry should be turned after half the cooking time.

ARRANGING

Individual foods e.g. chicken portions or chops, should be placed on a dish so that the thicker parts are towards the outside.

QUANTITY

Small quantities cook faster than large quantities, also small meals will reheat more quickly than large portions.

PIERCING

The skin or membrane on some foods will cause steam to build up during cooking. These foods must be pierced or a strip of skin should be peeled off before cooking to allow the steam to escape. Eggs, potatoes, apples, sausages etc, will all need to be pierced before cooking. DO NOT ATTEMPT TO BOIL EGGS IN THEIR SHELLS.

COVERING

Cover foods with microwave cling film or a lid. Cover fish, vegetables, casseroles, soups. Do not cover cakes, sauces, jacket potatoes or pastry items.

DEFROSTING GUIDE

- ▶ Do not defrost covered meat. Covering might allow cooking to take place. Always remove outer wrap and tray. Use only containers that are microwave-safe.
- ▶ Begin defrosting whole poultry breast-side-down. Begin defrosting roasts fat-side-down.
- ▶ The shape of the package alters the defrosting time. Shallow rectangular shapes defrost more quickly than a deep block.
- ▶ After 1/3 of the defrost time has elapsed, check the food. Toy may wish to turn over, break apart, rearrange or remove thawed portions of the food.
- ▶ During defrost, the oven will prompt you to turn the over. At this point, open oven door and check the food. Follow the techniques listed below for optimum defrost results.
  Then, close oven door, press the START pad to complete defrosting.
- ▶ When defrosted, food should be cool, but softened in all areas. If still slightly icy, return to microwave oven very briefly, or let stand a few minutes. After defrosting, allow food to stand 5-60 minutes if there are any icy areas.
  Poultry and fish may be placed under running cool water until defrosted
- ➪ ***Turn over*** : Roast, ribs, whole poultry, turkey breasts, hot dogs, sausages, steaks, or chops.
- ➪ ***Rearrange*** : Break apart or separate steaks, chops, hamburger patties, ground meat, chicken or seafood pieces, chunks of meat such as stew beef.
- ➪ ***Shield*** : Use small strips of aluminum foil to protect thin areas or edges of unevenly shaped foods such as chicken wings. To prevent arcing, do not allow foil to come within 1-inch of oven walls or door.
- ➪ ***Remove*** : To prevent cooking, thawed portions should be removed from the oven at this point. This may shorten defrost time for food weighing less than 3 lbs.(1350g).

DEFROSTING CHART (by Time Defrost)

ITEM & WEIGHT	DEFROSTING TIME	STANDING TIME	SPECIAL TECHNIQUES
BEEF			
Minced beef 1 lb./450g	8-10 min.	15-20 min.	Break apart and remove thawed portions with fork.
Stew Meat 1 1/2 lbs./675g	12-14 min.	25-30 min.	Separate and rearrange on
Patties 4(4oz./110g)	6-8 min.	15-20 min.	Turn over after half the time.
PORK			
Spareribs 1 lb./450g	6-8 min.	25-30 min.	Separate and rearrange once.
Chops 4(5oz./125g)	6-8 min.	25-30 min.	Separate and turn over once.
Minced pork 1 lb./450g	7-8min.	15-20 min.	Break apart and remove thawed portions with fork.
POULTRY			
Whole Chicken 2 1/2 lbs./1125g	22-24 min.	45-90 min.	Break side down. Turn over after half the time. Shield as needed.
Chicken Breasts 1 lbs./450g	8-10 min.	15-30 min.	Separate and rearrange once.
Fryer Chicken(cut up) 2 lbs./900g	17-19 min.	25-30 min.	Separate and rearrange once.
Chicken Thights 1 1/2 lbs./675g	12-14 min.	15-30 min.	Separate and rearrange once.
FISH & SEAFOOD			
Whole Fish 1 lb./450g	6-8 min.	15-20 min.	Turn over after half the time. Shield as needed.
Fish Fillets 1 1/2 lb./675g	8-10 min.	15-20 min.	Turn over after half the time. Shield as needed.
Shrimp 1/2 lb./225g	2-3 min.	15-20 min.	Turn over after half the time. Shield as needed.

COOKING & REHEATING CHART

Cooking chart

ITEM	POWER LEVEL	COOKING TIME PER LB./450G	SPECIAL INSTRUCTION
MEAT			- Chilled meat and poultry should be removed from the refrigerator at least 30 minutes before cooking. - Always let the meat and poultry stand, covered after cooking.
Beef joint - Rare	PL-8	6-8 min.	
- Medium	PL-8	7-10 min.	
- well done	PL-8	9-11 min.	
Pork Joint	PL10	9-12 min.	
Bacon joint	PL10	5-7 min.	
POULTRY			
Whole chicken	PL10	4-9 min.	
Portions chicken	PL-8	5-7 min.	
Breast (boned)	PL-8	6-8 min.	
FISH			- Brush a little oil or melted butter over the fish, or add 15~30ml(1-2 tbsp) lemon juice, wine, stock, milk or water. - Always let the fish stand, covered, after cooking
Fish Fillets	PL10	3-5 min.	
Whole Mackerel, Cleaned and prepared	PL10	3-5 min.	
Whole Trout, Cleaned & Prepared	PL10	4-6 min.	
Salmon steaks	PL10	4-6 min.	

NOTE : The above times should be regarded only as a guide. Allow for difference in individual tastes and preferences. The times may vary due to the shape, cut, and composition of the food. Frozen meat, poultry and fish must be thoroughly thawed before cooking.

COOKING & REHEATING CHART

Reheating chart

- Baby food particularly needs to be checked carefully before serving to prevent burns.
- When heating pre-packaged ready-cooked foods, always follow the pack instructions carefully.
- If you freeze foods which were bought from the fresh or chilled counters, remember that they should be thoroughly thawed before following the heating instructions on the packed. It's worth putting a note on them so that other members of the household will remember too.
- Remember to remove metal ties and transfer food from foil containers before reheating.
- Chilled(refrigerated) food takes longer to reheat than food at room temperature (such as just-cooled food or food from the store cupboard).
- All foods should be reheated using full microwave power.

ITEM	COOKING TIME	SPECIAL INSTRUCTIONS
Baby food 4.5oz.	20 sec.	Empty into a small serving bowl. Stir well once or twice during heating. Before serving, check the temperature carefully.
Baby milk 100ml / 4fl.oz. 225ml / 8fl.oz.	 20-30 sec. 40-50 sec.	Stir or shake well and pour into a sterilized bottle. Before serving, shake well and check the temperature carefully.
Sandwich roll or bun 1 roll	20-30 sec.	Wrap in paper towel and place on glass microwaveable rack. ***Note : Do not use recycled paper towels.**
Lasagna 1 serving (10 ½ oz./300g)	4-6 min.	Place lasagna on microwaveable plate. Cover with plastic wrap and vent.
Casserole 1 cup 4 cups	 1 ½-3 min. 5-7 min.	Cook covered, in microwaveable casserole. Stir once halfway through cooking.
Mashed potatoes 1 cup 4 cups	 2-3 min. 6-8 min.	Cook covered, in microwaveable casserole. Stir once halfway through cooking.
Baked beans 1 cup	2-3 min.	Cook covered, in microwaveable casserole. Stir once halfway through cooking.
Ravioli or pasta in sauce 1 cup 4 cups	 2-3 min. 6-9 min.	Cook covered, in microwaveable casserole. Stir once halfway through cooking.

VEGETABLE CHART

Use a suitable glass pyrex bowl with lid. Add 30-45ml cold water(2-3 tbsp.) for every 250g unless another water quantity is recommended - see table. Cook covered for the minimum time - see table.
Continue cooking to get the result you prefer. Stir once during and once after cooking. Add salt, herbs or butter after cooking. Cover during a standing time of 3 minutes.
Hint : cut the fresh vegetables into even sized pieces. The smaller they are cut, the quicker they will cook.
All vegetables should be cooked using full microwave power.

Cooking Guide for fresh vegetables

VEGETABLES	WEIGHT	TIME	COMMENTS
Broccoli	½ lb./250g 1 lb./500g	3-5 min 6-8 min	Prepare even sized florets. Arrange the stems to the centre.
Brussels sprouts	½ lb./250g	3-5 min	Add 60-75ml(4-5 tbsp.) water.
Carrots	½ lb./250g	3-5 min	Cut carrots into even sized slices.
Cauliflower	½ lb./250g 1 lb./500g	3-5 min 6-8 min	Prepare even sized florets. Cut big florets into halves. Arrange stems to the centre.
Courgettes	½ lb./250g	3-4 min	Cut courgettes into slices. Add 30ml(2tbsp.) water or a knob of butter. Cook until just tender.
Aubergine (eggplant)	½ lb./250g	3-4 min	Cut aubergine into small slices and sprinkle with 1 tablespoon lemon juice.
Leeks	½ lb./250g	3-4 min	Cut leeks into thick slices.
Mushrooms	0.3 lb./125g ½ lb./250g	2-3 min 3-4 min	Prepare small whole or sliced mushrooms. Do not add any water. Sprinkle with lemon juice. Spice with salt and pepper. Drain before serving.
Onions	½ lb./250g	2-3 min	Cut onions into slices or halves. Add only 15ml(1tbsp.) water.
Pepper	½ lb./250g	2-4 min	Cut pepper into small slices.
Potatoes	½ lb./250g 1 lb./500g	4-5 min 6-8 min	Weigh the peeled potatoes and cut them into similar sized halves or quarters.
Turnip cabbage	½ lb./250g	4-6 min	Cut turnip cabbage into small cubes.

Cooking Guide for frozen vegetables

VEGETABLES	WEIGHT	TIME	INSTRUCTIONS
Spinach	0.3 lb./125g	2-3 min	Add 15ml(1tbsp.) cold water.
Broccoli	½ lb./250g	4-5 min	Add 30ml(2 tbsp.) cold water.
Peas	½ lb./250g	4-5 min	Add 15ml(1 tbsp.) cold water.
Green beans	½ lb./250g	4-5½ min	Add 30ml(2 tbsp.) cold water.
Mixed vegetables (carrots/peas/corn)	½ lb./250g	4-5 min	Add 15ml(1 tbsp.) cold water.
Mixed vegetables (Chinese style)	½ lb./250g	4-6 min	Add 15ml(1 tbsp.) cold water.

RECIPES

TOMATO & ORANGE SOUP

1 oz.(25g) butter
1 medium onion, chopped
1 large carrot & 1 large potato, chopped
13/4lb(800g) canned, chopped tomatoes
juice and grated rind of 1 small orange
11/2pints(900ml) hot vegetable stock
salt and pepper to taste

1. Melt the butter in a large bowl on PL10 for 30 seconds.
2. Add the onion, carrot and potato and cook on PL10 for 4 minutes. stir halfway through cooking.
3. Add the tomatoes, orange juice, orange rind and stock. Mix thoroughly. Season with salt and pepper to taste. Cover the bowl and cook on PL10 for 15 minutes. stir 2-3 times during cooking, until the vegetables are tender.
4. Blend and serve immediately.

FRENCH ONION SOUP

1 large onions, sliced
1 tbsp (15ml) corn oil
2 oz.(50g) plain flour
2 pints(1.2 liters) hot meat or vegetable stock
salt and pepper to taste
2 tbsp (30ml) parsley, chopped
4 thick slices French bread
2 oz.(50g) cheese, grated

1. Place the onion and oil a bowl, mix well and cook on PL10 for 1 minutes.
2. Stir in the flour to make a paste and gradually add stock. Season and add the parsley.
3. Cover the bowl and cook on PL-7 for 16 minutes.
4. Pour the soup into serving bowls, submerge bread and sprinkle generously with cheese.
5. Cook on PL-7 for 2 minutes, until the cheese has melted.

STIR FRIED VEGETABLES

1 tbsp(15ml) sunflower oil
2 tbsp (30ml) soy sauce
1 tbsp (15ml) sherry
1"(2.5cm) root ginger, peeled and finely grated
2 medium carrots, cut into fine strips
4 oz.(100g) button mushrooms, chopped
2 oz.(50g) beansprouts
4 oz.(100g) mange-tout
1 red pepper, seeded and thinly sliced
4 spring onions, chopped
4 oz.(100g) canned water chestnuts, sliced
1/4 head of chinese leaves, thinly sliced

1. Place the oil, soy sauce, sherry, ginger, garlic and carrots in a large bowl, mix thoroughly
2. Cover and cook on PL10 for 3-5 minutes, stirring once.
3. Add the button mushrooms, beansprouts, mange-tout, red pepper, spring onions, water chestnuts and chinese leaves. Mix thoroughly.
4. Cook on PL10 for 5-6 minutes, until the vegetables are tender. Stir 2-3 times during cooking.

Stir fried vegetables are ideally served with meat or fish.

HONEYED CHICKEN

4 boneless chicken breasts
2 tbsp(30ml) clear honey
1 tbsp(15ml) whole grain mustard
1/2 tsp(2.5ml) dried tarragon
1 tbsp(15ml) tomato puree
1/4 pint(150ml) chicken stock

1. Place the chicken breasts in a casserole dish.
2. Mix all remaining ingredients together and pour over the chicken. Salt and pepper to taste.
3. Cook on PL10 for 13-14 minutes. Rearrange and coat the chicken with the sauce twice during cooking.

BLUE CHEESE & CHIVE JACKETS

2 baking potatoes,
(approx.9 oz.(250g) each)
2 oz.(50g) butter
4 oz.(100g) blue cheese, chopped
1 tbsp(15ml) fresh chives, chopped
2 oz.(50g) mushrooms, sliced
salt and pepper to taste

1. Prick each potato in several places. Cook on PL10 for 7-9 minutes. Halve and scoop the flesh into a bowl, add the butter, cheese, chives, mushrooms, salt and pepper, mix thoroughly.
2. Pile mixture into the potato skins and place in a flan dish.
3. Cook on PL-5 for 10 minutes.

WHITE SAUCE

1 oz.(25g) butter
1 oz.(25g) plain flour
1/2 pint(300ml) milk
salt and pepper to taste

1. Place the butter in a bowl and cook on PL10 for 30 seconds, until melted.
2. Stir in the flour and whisk in the milk. Cook on PL10 for 3-4 minutes, stirring every 2 minutes until thick and smooth. Season with salt and pepper to taste.

STRAWBERRY JAM

11/2 lb.(675g) strawberries, hulled
3 tbsp(45ml) lemon juice
11/2 lb.(675g) caster sugar

1. Place strawberries and lemon juice in a very large bowl, heat on PL10 for 4 minutes, or until the fruit has softened. Add sugar, mix well. Without covered.
2. Cook on PL-7 for 20-25 minutes, until setting point*is reached, stir every 4-5 minutes.
3. Pour into hot, clean jars. Cover, seal and label.

** setting point : To determine setting point, place 1 tsp(5ml) jam onto chilled saucer. Allow to stand for 1 minute. Move surface of jam gently with your finger, if the surface wrinkles setting point has been reached.*

PLAIN MICROWAVE CAKE

4 oz.(100g) margarine
4 oz.(100g) sugar
1 eggs
4 oz.(100g) self raising flour, sifted
2-3 tbsp(30-45ml) milk

1. line the base of 8" (20.4cm) cake dish with grease-proof paper.
2. Cream the margarine and sugar together until light and fluffy. Beat in the eggs and fold in the sifted flour alternately with the milk.
3. Pour into prepared container. Cook on PL10 for 4-5 minutes, until a skewer comes out cleanly.
4. Leave the cake to stand for 5 minutes before turning out.

OMELETTE

1/2 oz.(15g) butter
4 eggs
6 tbsp(90ml) milk
salt & pepper

1. Whisk together eggs and milk.
2. Place butter in 10"(26cm) flan dish. Cook on PL10 for 30 seconds, until melted. Coat the dish with the melted butter.
3. Pour omelette mixture into flan dish. Cook on PL10 for 2 minutes. whisk mixture and cook again on PL10 for 1 minutes.

SCRAMBLED EGG

1/2 oz.(15g) butter
2 eggs
2 tbsp(30ml) milk
salt & pepper

1. Melt the butter in a bowl on PL10 for 30 seconds.
2. Add the eggs, milk and seasoning and mix well.
3. Cook on PL10 for 3 minutes, stirring every 30 seconds.

SAVORY MINCE

1 small onion, diced
1 clove garlic, crushed
1 tsp(5ml) oil
7 oz.(200g) can chopped tomatoes
1 tbsp(15ml) tomato puree
1 tsp(5ml) mixed herbs
8 oz.(225g) minced beef
salt and pepper

1. Place onion, garlic and oil in casserole, and cook on PL10 for 2 minutes or until soft.
2. Place all other ingredients in casserole. Stir well.
3. Cover and cook on PL10 for 5 minutes then PL-5 for 8-13 minutes or until the meat is cooked.

SHARP®

SHARP ELECTRONICS CORPORATION
100 Paragon Drive, Montvale, NJ 07645

APR. 2020